## Scharniermaße und Fugenberechnung bei Werkseinstellung (Montageplatte Distanz = 0 mm)

Fronteinsprung bei vollem Öffnungswinkel

### Eckanschlag

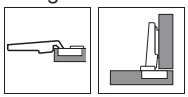

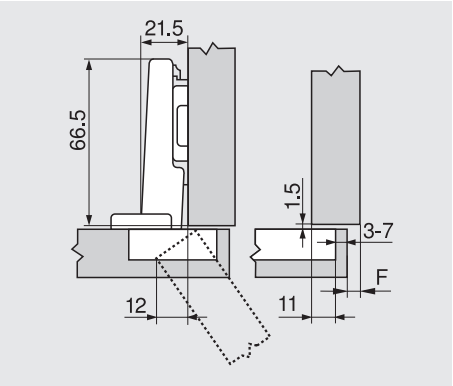


### Mittelanschlag

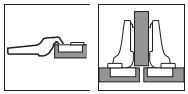

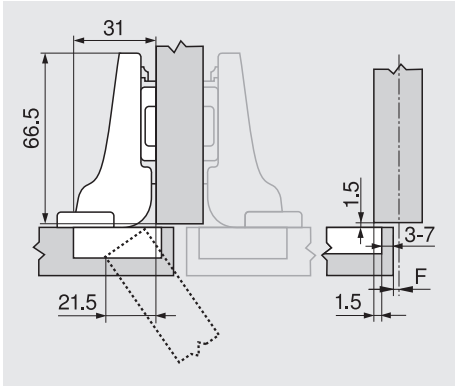


### Innenanschlag

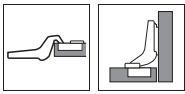

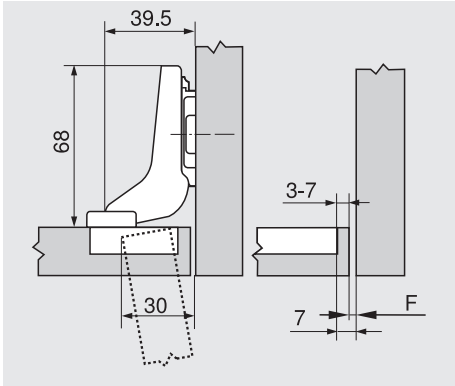


F Fuge

Anschraubposition der Montageplatte um die Frontdicke + 1.5 mm zurücksetzen

### Topfbohrabstand

| | Frontaufschlag | | | | | | | | | | | | | | |
|---|---|---|---|---|---|---|---|---|---|---|---|---|---|---|---|
| | - | 5 | 6 | 7 | 8 | 9 | 10 | 11 | 12 | 13 | 14 | 15 | 16 | 17 | 18 |
| 0 | | | | | | | | | | | 3 | 4 | 5 | 6 | 7 |
| 3 | | | | | | | | 3 | 4 | 5 | 6 | 7 | | | |
| 6 | | | | | 3 | 4 | 5 | 6 | 7 | | | | | | |
| 9 | | 3 | 4 | 5 | 6 | 7 | | | | | | | | | |
| Montageplatte | | | | | | | | | | | | | | | |

| | Frontaufschlag | | | | | | | | | | | | | | |
|---|---|---|---|---|---|---|---|---|---|---|---|---|---|---|---|
| | - | -4.5 | -3.5 | -2.5 | -1.5 | -0.5 | 0.5 | 1.5 | 2.5 | 3.5 | 4.5 | 5.5 | 6.5 | 7.5 | 8.5 |
| 0 | | | | | | | | | | | 3 | 4 | 5 | 6 | 7 |
| 3 | | | | | | | | 3 | 4 | 5 | 6 | 7 | | | |
| 6 | | | | | 3 | 4 | 5 | 6 | 7 | | | | | | |
| 9 | | 3 | 4 | 5 | 6 | 7 | | | | | | | | | |
| Montageplatte | | | | | | | | | | | | | | | |

| | Frontaufschlag | | | | | | | | | | | | | | |
|---|---|---|---|---|---|---|---|---|---|---|---|---|---|---|---|
| | | | | | | | | | | | -4 | -3 | -2 | -1 | 0 |
| 0 | | | | | | | | | | | 3 | 4 | 5 | 6 | 7 |
| 3 | | | | | | | | | | | | | | | |
| 6 | | | | | | | | | | | | | | | |
| 9 | | | | | | | | | | | | | | | |
| Montageplatte | | | | | | | | | | | | | | | |

### Mindestfuge (F) für Fronten mit Frontradius (R = 1 mm) bei Werkseinstellung

| Topfbohrabstand TB | Frontdicke FS 16 | 18 | 19 | 20 | 21 | 22 | 23 | 24 | 25 | 26 | 28 | 30 |
|---|---|---|---|---|---|---|---|---|---|---|---|---|
| 3 | 0.5 | 0.8 | 1.0 | 1.2 | 1.5 | 1.8 | 2.2 | 2.7 | 3.5 | 4.3 | Wir empfehlen einen Anschlagversuch | |
| 4 | 0.5 | 0.8 | 1.0 | 1.2 | 1.4 | 1.7 | 2.0 | 2.5 | 3.1 | 3.8 | | |
| 5 | 0.5 | 0.8 | 0.9 | 1.2 | 1.4 | 1.7 | 2.0 | 2.4 | 2.9 | 3.4 | | |
| 6 | 0.5 | 0.8 | 0.9 | 1.2 | 1.3 | 1.6 | 1.9 | 2.3 | 2.7 | 3.2 | | |
| 7 | 0.5 | 0.8 | 0.9 | 1.1 | 1.3 | 1.6 | 1.9 | 2.2 | 2.6 | 3.0 | | |
| Zusätzlich bei + 2 mm Seitenverstellung | | | | | | | | | | | | |
| | +0.2 | +0.4 | +0.4 | +0.5 | +0.5 | +0.5 | +0.5 | +0.5 | +0.5 | +0.5 | | |

### Verstellung

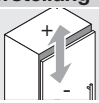


Max. ± 3.0 mm
Siehe Montageplatten

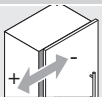


± 2.0 mm

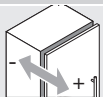


+ 3.0 mm
- 2.0 mm

### Schraubmontage

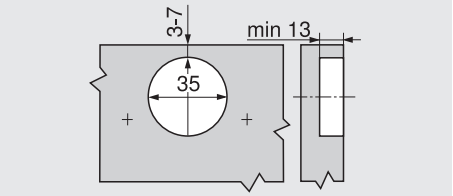


### INSERTA-/Pressmontage

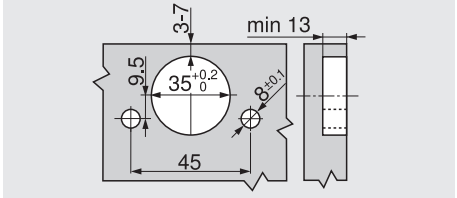

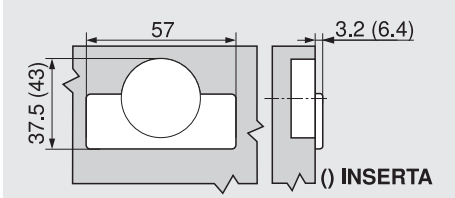
### Topfmaße